Wastewater Flows

One major concern in the design of household wastewater systems is the quantity of wastewater generated daily. The system must have enough capacity to accommodate and treat this total flow. Normal contributions to this flow will come from bathroom, kitchen, and laundry facilities. Kansas regulations require that all domestic wastewater be treated and disposed through the onsite system. Surface runoff from roofs and paved areas, subsurface drainage from footing drains and sump pumps and cooling water are not domestic wastewater and must be excluded from soil absorption systems. Such water may be used to help maintain the operating water level in wastewater ponds.

Design flow is estimated by multiplying the number of household bedrooms by 150 gallons per day (gpd). This is based on 75 gallons per person per day for two people in each bedroom[1]. This accounts for the number of people that can occupy the home for extended periods rather than how many actually live there when the system is installed. Houses frequently experience a change in ownership or occupancy over the life of the wastewater system. When calculating wastewater flow, note that a water softener may increase water use by as much as 10 gallons per capita per day or possibly more where water is very hard.

Site and Soil Evaluation

Although the septic tank is important for removing solids from the wastewater, more of the wastewater treatment is provided by the soil. Microorganisms living in the soil profile feed on organic matter in the wastewater, treating and purifying the water as they grow. Four feet of aerated soil below the bottom of the absorption field is necessary to ensure adequate treatment of the wastewater before it reaches the water table or flows laterally due to a restrictive condition.

In sandy soil, it is recommended that as much vertical separation as possible be provided. An understanding of the soil is necessary to assess the ability of the site to provide good wastewater treatment. Soil must absorb the septic tank effluent, treat the wastewater, and transmit treated wastewater away from the soil absorption areas.

The site evaluation begins by reviewing available information such as a published soil survey and then evaluating the soil on site. County soil survey reports are usually available from the local Natural Resource Conservation Service (NRCS, formerly Soil Conservation Service). Contact your local NRCS office, county conservation district or Extension office for a copy of the report.

The soil survey provides general information and serves as a guide to the soil conditions. Sites characterized by slow permeability, restrictive subsoil layer, shallow soil over rock, high groundwater, poor drainage, or steep slopes, as identified in the soil survey, have moderate to

TABLE 1—Soil Limitation Ratings Used by NRCS For Wastewater Absorption Fields

	LIMITS			
Property	**Slight**	**Moderate**	**Severe**	**Restriction or Feature**
USDA Texture	–	–	Ice	Permafrost (not found in Kansas)
Flooding	None, Protected	Rare	Common	Flood water inundates site
Depth to Bedrock (in.)	>[2] 72	40-72	<[3] 40	Bedrock or weathered bedrock restricts water movement or reduces treatment capacity
Depth to Cemented Pan (in.)	> 72	40-72	< 40	Reduces water and air movement
Depth to High Water Table, (ft. below surface)	> 6	4-6	< 4	Saturated soil, poor aeration, anaerobic soil, restricted movement
Permeability, (in./hr.)				
24-60 in. layers	2.0-6.0	0.6-2.0	< 0.6	Slow perc rate, poor drainage
less than 24 in. layers	–	–	> 6.0	Poor filter
Slope, (percent)	0-8	8-15	> 15	Difficult to construct and hold in place
Large stones greater than 3 in., (percent by wt.)	< 25	25-50	> 50	Restricted water and air movement results in reduced treatment capacity

[1]The 150 gallons per bedroom, or 75 gallons of wastewater produced daily by each person, assumes at least some water using appliances such as clothes washer, dishwasher, water softener, etc.
[2]> means greater than
[3]< means less than

severe restrictions for conventional septic tank–soil absorption systems and other options may be preferred or required.

A site and soil evaluation should be completed in order to locate the area to be used for the absorption field, to verify the soil characteristics, and to size the system. Areas with slopes steeper than about 20 percent will cause considerable difficulty during construction and are not recommended for lateral field installations. Rock outcroppings warn of shallow soils and may suggest the probable direction of groundwater flow. The range of values for each of several properties that cause the soil to be placed in slight, moderate, and severe limitation rating for soil absorption systems is shown on Table 1.

The wastewater system area should be chosen prior to any construction on a site and should be an integral part of the homesite design and development. A soil profile analysis is highly recommended to ensure suitability of the area and to establish the loading rate so that adequate space is available for the absorption field and its replacement.

To perform a soil profile analysis, an excavator is usually used to open a pit, which exposes the soil profile. The soil evaluation, performed by a trained and qualified person[4], includes examining the soil profile, determining the soil texture, structure, color, consistence, measuring soil depth, and looking for evidence of a high or perched water table or other restrictions. The soil profile should be analyzed to a depth of at least 4 feet below the bottom of the absorption area or at least 6 feet below the surface.

Because OSHA regulations require shoring for trenches deeper than 5 feet for some soils, it is recommended that the pit be constructed so a person is not required to go deeper. Soil below 5 feet can be examined from cuttings, observation from a distance, and by shovel or auger without entering a deeper pit.

At least three pits should be dug surrounding the area to establish the range of soil characteristics that are present on the site, and to determine the best location for the absorption field. Sanitarians, usually through local health or environmental departments, or environmental health specialists, are available to assist in the site and soil

TABLE 2—Design Septic Tank Effluent Loading Rates for Various Soil Textures and Structures

Group	Soil Characteristics	Wastewater Loading (in/day)	(cm/day)	(gpd/ft²)
I.	Gravelly coarse sand and coarser.	Not Recommended for conventional soil absorption system[5]		
II.	Coarse sands (not cemented).	1.8	4.6	1.1
III.	Medium sand with single grain structure and loose to friable consistence (not cemented).	1.5	3.7	0.9
IV.	Other sands and loamy sands with single grain or weak structure (not extremely firm or cemented consistence). Sandy loams, loams and silt loams with moderate or strong structure (except platy and loose to friable consistence).	1	2.5	0.6
V.	Sandy loams, silt loams and loams with weak structure (not of extremely firm or cemented consistence). Sandy clay loams, clay loams and silty clay loams with moderate to strong structure (not of platy, of firm, or of cemented consistence).	0.7	1.7	0.4
VI.	Sandy clay loams, clay loams and silty clay loams with weak structure (not massive, not of firm, or of cemented consistence.) Some sandy clays, clays and silty clays with moderate and strong structure (not platy, not of firm, or of cemented consistence).	0.4	1	0.25
VII.	Other soils of high clay content with weak or massive structure, extremely firm or cemented consistence or platy, clay pan, fragipan, and caliche soils.	Not Recommended for conventional soil absorption system[6]		

NOTE: The above descriptions are estimates and assume that the soil does not have large amounts of swelling clays. Soils with platy structure, massive, compacted or high density should be used with extreme caution or avoided.

[4]A trained and qualified person would include a soil scientist, such as one working for NRCS, environmental health specialist, sanitarian, or other person who has received appropriate soil training and through experience is competent.
[5]Soil is too coarse for conventional soil absorption designs, use pressure distribution dosing or other alternative system to prevent too rapid infiltration.
[6]Soils with these conditions may be acceptable for wastewater stabilization ponds or possibly other alternative systems. (See Table 6).

evaluations. A few consultants, either engineers or design/installation contractors, also provide this service.

Table 2 gives the recommended loading rates based on soil texture, structure, and consistence information. These loading rates are based on research that has shown that soil characteristics provide a strong basis for wastewater system design loading rate. Results show system design should be based on the most limiting soil texture found in the first 4 feet of soil below the bottom of the proposed absorption lateral.

Once the wastewater flow (number of bedrooms) and loading rate for the soil are known, the absorption field area needed for the lateral system can be calculated. It is highly recommended that the absorption field and an equal area reserved for future use be marked and fenced so they will not be disturbed during construction. Required setback distances to property lines, wells, surface water, and buildings must be checked and included in the site plan.

Where evaporation substantially exceeds precipitation, as in central and western Kansas, a reduction in soil absorption area may be used when the soil is well suited to wastewater absorption. A well suited soil has medium to coarse texture, perc rates less than 45 minutes per inch and wastewater loading rates of 0.5 gallons per square foot per day or more. For marginal, high clay, soil that has low loading rates, no reduction should be used regardless of location in Kansas. Recommended allowable soil absorption system reductions and percent of total absorption area for central and western Kansas is shown on Table 3.

Since about 1970 considerable research about onsite wastewater systems has occurred. New information, including design procedures, operating characteristics, and many new products, has been and continues to be developed to help improve onsite wastewater systems.

The soil profile evaluation provides a comprehensive assessment of soil characteristics and is the preferred

TABLE 3—Recommended Absorption Reductions

	Western Kansas	Central Kansas	Eastern Kansas
Actual absorption area (in percent)	65	80	100
Recommended reduction (in percent)	35	20	0

TABLE 4—Soil Absorption Field Loading Rate and Area Recommendation for Septic Tank Effluent Based on Perc

Perc Rate (minutes/inch)	Recommended Absorption Area (ft^2/bedroom)	Loading Rate (gpd/ft^2)
Less than 5 minutes	Not recommended for conventional soil absorption system[5]	
5-10 minutes	165	0.91
11-15 minutes	190	0.79
16-30 minutes	250	0.6
31-45 minutes	300	0.5
46-60 minutes	330	0.45
Greater than 60 minutes	Not recommended for conventional soil absorption system[6]	

TABLE 5—Minimum Required and Minimum Recommended Separation Distances for Onsite Wastewater Systems

Separation Distances	Minimum Distance (ft.) Required	Recommended[7]
Septic Tank to foundation of house or other buildings	10	10
Soil Absorption System to dwelling foundation	20	50
Any part of a wastewater system to:		
public potable water line	25[8]	25
private potable water line	10	25
property line	10	50
public water supply well or suction line	100[9]	200
private water supply well or suction line	50[9]	100
surface water course	50	100
Wastewater Lagoons to:		
property line	50[10]	200
dwelling foundation	50[10]	200

[5]Soil is too coarse for conventional soil absorption designs, use pressure distribution dosing or other alternative system to prevent too rapid infiltration.
[6]Soils with these conditions may be acceptable for wastewater stabilization ponds or possibly other alternative systems. (See Table 6).
[7]These recommended separation distances help assure a minimum of problems, but are no assurance that problems will not result.
[8]The minimum distance specified by KDHE guidelines for public water supplies
[9]The minimum distance required by KAR 28-30-8(a).
[10]When lot dimension, topography, or soil condition make maintaining the required 50 feet separation distance impossible, a written variance from the affected property owners shall be obtained and filed with deeds.

method for determining the suitability of the soil to accept and treat wastewater and establish the design loading.

Some local sanitary codes require the perc test and other codes require both a perc test and a soil profile evaluation. "Perc" is short for percolation and has become the preferred term for this test to evaluate soil suitability to accept wastewater. Percolation means water movement through a soil. Since the driving force is gravity, most of the movement will be downward. The perc test really measures an infiltration rate for water into a wet but unsaturated soil at the depth of expected system placement. The procedure for doing a perc test is described in Appendix A (page 14). Once the perc rate is known, refer to Table 4 to determine the loading rate and absorption field area, or use another method specified by the local sanitary code.

Separation of the soil absorption field from buildings, structures, and boundaries is essential to maintain system performance, to permit repairs, to maintain required separation from wells, and to reduce undesirable effects of underground wastewater flow and dispersion. The structures and boundaries to consider include easements, buildings, property lines, utilities, wells, and components of the wastewater disposal system. Minimum required and recommended separation distances for private wastewater systems are given in Table 5.

Many soils, especially in eastern Kansas, have properties that restrict their suitability for soil absorption fields. When limiting properties occur in the soil profile, a variation of conventional laterals, wastewater ponds or alternative treatment systems may be used to compensate for the limiting condition. Variations and alternatives that may be considered are summarized in Table 6. When possible, sites with these restrictive conditions should be avoided due to higher cost, larger land area, and greater maintenance requirements for the alternative systems.

TABLE 6—General Alternative Option Guide for Moderate or Severe Limiting Soil Conditions

I. Shallow Permanent, Perched or Seasonal Groundwater
- Subsurface drainage system at least 50 feet from the soil absorption area to lower the water table—suitable for moderate or more permeable soil conditions. This alternative creates drainage that must be discharged away from the area
- Variation of conventional lateral trench
  - Shallow in-ground trench—suitable for groundwater at 4¾ feet or deeper
  - At-grade lateral system—suitable for groundwater at 4 feet or deeper
- Enhanced wastewater treatment[11] by rock-plant filter[12], sand filter[13], or aerated tank[14] or other equivalent system[15] followed by shallow soil absorption or wastewater pond
- Wisconsin (engineered) mound—suitable for groundwater or other restriction at 1 foot or deeper
- Rock-plant filter[12]—suitable for ground water at 1 foot or deeper followed by soil absorption

II. Shallow Bedrock
- Wastewater pond—suitable for sites with bedrock at any depth when overexcavated and at least 1½ feet of compacted clay lining is installed
- Variation of conventional lateral trench
  - Shallow in-ground trench system— suitable for bedrock at 4¾ feet or deeper
  - At-grade lateral system—suitable for bedrock at 4 feet or deeper
- Enhanced wastewater treatment[11] options (see I above) followed by shallow soil absorption
- Wisconsin (engineered) mound—suitable for bedrock at 1 foot or deeper

III. Rapid Perc Rate (< 5 mpi) or very permeable soil (> 20 in/hr)
- Pressurized distribution dosing system to uniformly distribute wastewater throughout the absorption field
- One foot lining using loam soil to bottom and sides of the trench to limit water absorption rate

IV. Slow Perc Rate (60 to 120 mpi) or "slow" soil permeability (0.2-0.6 in/hr)
- Dual shallow lateral systems in permeable surface soils (each with 60% to 80% of conventional lateral area) with a diversion valve and alternating use of systems
- Wastewater pond provided sufficient site area is available to meet all setback requirements
- Wisconsin (engineered) mound—suitable for nearly level sites with more permeable surface soil
- Enhanced wastewater treatment[11] options (see I above) followed by shallow soil absorption into permeable surface soil

V. Very Slow Perc Rate Soil (> 120 mpi), "very slow" soil permeability (< 0.2 in/hr)
- Wastewater pond—suitable for sites with enough site area to meet all setback requirements
- Wisconsin (engineered) mound—suitable for level sites with permeable surface soil
- Enhanced wastewater treatment[11] options (see I above) followed by shallow soil absorption into permeable surface soil

[11]Enhanced treatment is higher quality than septic tank effluent and may be equivalent to secondary treatment in wastewater treatment terminology, or in some cases even higher quality, comparable to advanced wastewater treatment
[12]Rock-plant filter provides a higher level of treatment than septic tanks. Due to higher quality effluent, the soil absorption field size may be smaller than for a conventional absorption field system.
[13]Sand filters provide a very high level of treatment. Due to this high quality effluent, the soil absorption field may be smaller than that required for a conventional absorption field.
[14]Aerobic tanks have poor operating records so an operating/maintenance agreement with a reliable supplier is strongly recommended to ensure system performance.
[15]Promising technology is underdevelopment that may meet enhanced treatment requirements.

Septic Tank

The septic tank separates the settleable and floatable solids, contains an anaerobic environment where bacteria partially decompose the solids, and provides storage for the accumulated sludge and scum. The septic tank is sized so that wastewater flow through the tank takes at least 24 hours even with sludge and scum accumulation. This detention time permits the settling of solids heavier than water and allows scum, grease and other materials lighter than water to float to the surface before the water is discharged to the absorption field.

Septic tanks are designed to handle all the daily flow a household will normally produce and must have sufficient capacity for the minimum recommended volume of at least two times the daily wastewater flow. Larger capacity tanks usually mean less carryover of solids, resulting in prolonged life of the soil absorption field. Larger tanks require less frequent cleaning and allow for future expansion of the home or times when guests visit. They also have a good cost-benefit return. Table 7 gives minimum and recommended capacities for sizing septic tanks.

Less solids exiting the septic tank helps extend the life of the soil absorption field because less clogging of the soil pores will occur. Septic tank effluent filters are effective in reducing solids and providing an added measure of protection for the soil absorption field so their use is highly recommended.

TABLE 7—Minimum and Recommended Septic Tank Capacities Based on the Number of Household Bedrooms.[16]

Number of Bedrooms	Septic Tank Capacity (gallons)[17]	
150 gpd/bedroom	Minimum	Recommended
1-3	1,000[18]	1,350
4	1,200	1,800
5	1,500	2,250

Two compartment tanks or two tanks in series also may help. If a multiple compartment tank is used, the first compartment shall be sized to contain from one-half to two-thirds of the total tank capacity. The total tank capacity is important and should be sized to retain at least two-to-three times the total daily wastewater flow as shown in Table 7. Figure 1 shows a design concept for a two compartment septic tank.

Tanks shall never be closer than 50 feet from any water supply and greater distances are preferred if possible. However, a 100-foot separation is required if the water source serves a public water supply. The septic tank shall not be located closer than 10 feet from any building, in swampy areas, or in areas located within the 100 year flood plain. Table 5 gives minimum required and recommended separation distances for onsite wastewater systems.

There shall be no permanent structure (patio, building, driveway, etc.) over the tank, lateral or other part of an onsite wastewater system. Consideration should also include easy access of trucks and equipment for pumping, maintenance, and repair. To avoid damage to the system, heavy equipment should not have to cross any portion of the wastewater system when servicing the septic tank.

A sketch of the wastewater disposal system as constructed, showing measurements should be made and delivered to the homeowner for future reference, and filed with the permit at the county health department. Figure 3 shows an example septic system reference sketch.

Septic tanks and soil absorption systems are an expensive and long-term investment. Material selection, design, and construction should be done with long life in mind. When located in suitable soil, well designed, properly constructed, and adequately maintained, they should last several decades.

All abandoned or unused septic tanks, cesspools, seepage pits or other holes that have received wastewater shall be emptied and plugged following procedures described in K-State Research and Extension bulletin MF-2246.

Figure 1—Compartmentalized Septic Tank

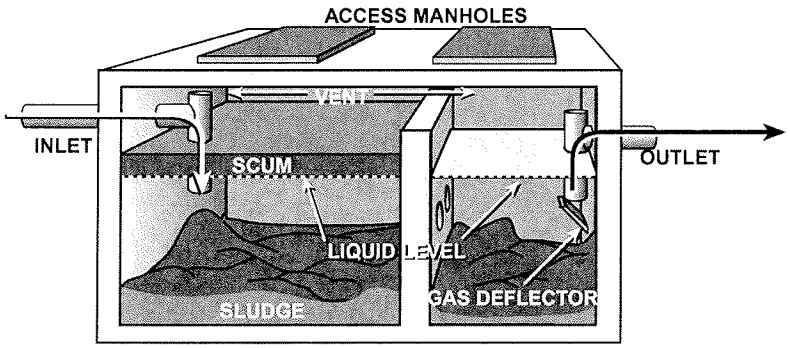

[16]*For each additional bedroom, add 300 gallons to the minimum value and 450 gallons to the recommended value.*
[17]*Volume held by the tank below the liquid level (invert of the outlet pipe).*
[18]*Minimum tank size is 1,000 gallons.*

Septic Tank Design/Construction Specifications[19]

General Requirements

Figure 2 shows the dimensions included in this section for a typical precast concrete septic tank. The following factors are required of all septic tanks regardless of the construction material:

A. The septic tank including all extensions to the surface shall be watertight to prevent leakage into or out of the tank. It shall be structurally sound and made of materials resistant to corrosion from soil and acids produced from septic tank gasses. Because of corrosion, steel tanks are not acceptable.

B. The tank liquid depth (distance from outlet invert to bottom of tank) shall be at least 3 feet but shall not exceed 6½ feet. The effective inside length of tanks shall not be less than 1.5 nor greater than four times the effective inside width.

C. The minimum septic tank capacity is two times the daily wastewater flow using 150 gallons per bedroom or 1,000 gallons, whichever is larger. See Table 7 for minimum tank sizes. Tanks sized at three times daily flow are recommended and shall be required when garbage disposals are used.

D. The top of all tanks shall be designed and constructed to support a minimum uniform load of 400 pounds per square foot plus 2,500 pound axle load. When buried more than 2 feet deep, the tank, especially the top, shall support an additional 100 pounds per square foot for each foot of soil or portion thereof in excess of 2 feet.

E. If the tank is placed in an area subject to any vehicular traffic it shall be certified to meet H-20 highway loading by a Kansas licensed structural engineer.

F. Space above the liquid line is required for that portion of the scum that floats above the liquid. For vertical sidewall tanks, the distance between the top of the tank and the outlet invert should be at least 15 percent of the liquid depth with a minimum

Figure 2—Design Details for a Precast Concrete Septic Tank

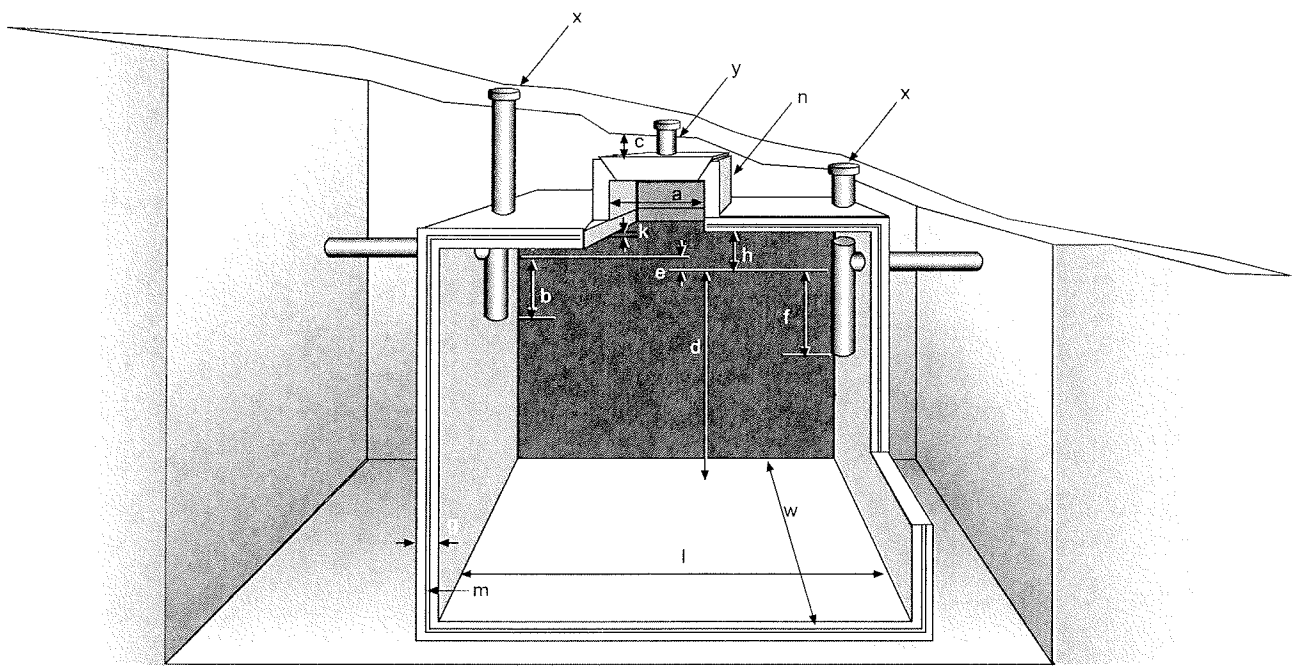

Name	Measurement	Min.	Max.
a. access manhole	smallest dimension	20"	–
b. inlet baffle	penetration	8"	0.2 × d
c. cover[20]	surface to manhole	surface	12"
d. liquid depth	outlet to tank bottom	3'	6½'
e. difference	inlet to outlet inverts	3"	4"
f. outlet baffle	outlet to bottom	0.35 × d.	
g. thickness	wall	2½"	–

Name	Measurement	Min.	Max
h. open space	outlet invert to top	7"	0.15 × d
k. space	gap	1"	–
l. tank length	inside of walls	6'	4 × w
m. reinforcement	per engineering design		as needed
n. extension riser length[20]		to ≤ 1' from surface grade	
w. tankwidth	inside of walls	4'	
x. inspection riser	inside diameter	6"	
y. location riser	inside diameter	1½"	

[19]Where locally available products cannot presently meet these requirements, manufacturers will have until July 1, 2002 to comply.
[20]If tank is deeper than 12" add extension riser as shown so top of riser is no more than 12" from surface

of 7 inches. In horizontal, cylindrical tanks, an area equal to approximately 12½ percent of the total volume should be provided above the liquid level. This condition is met if the space above the liquid level (distance from outlet invert to top of tank) is 15 percent of the tank diameter .

G. Sewage lines carrying solids from the source to the tank should have sufficient slope to maintain velocities that keep solids moving. For household size lines, a slope of between 1 percent (⅛ inch per foot) and 2 percent (¼ inch per foot) is usually best. The last 15 feet of sewer line preceding the tank shall not slope more than 2 percent (¼ inch per foot).

H. The inlet and outlet baffle or tee and compartment baffle should extend above the liquid level to one inch below the top of the tank. This space at the top of the tank is essential to allow gas to escape from the tank through the house stack vent.

I. The invert of the inlet pipe shall be located at least 3 inches above the invert of the outlet when the tank is level. This space allows for temporary rise in liquid level during discharges to the tank, and prevents liquid from standing in the sewer line between the house and the septic tank, which may cause stoppage or backup.

J. The septic tank or pumping tank inlet shall be a sanitary tee, elbow or long sweep elbow with low head inlet or baffle to direct incoming sewage downward and prevent flow from disturbing the floating scum layer. It should extend at least 8 inches below the liquid level, but should not penetrate deeper than 20 percent of the liquid depth.

K. The outlet tee or baffle prevents scum from being carried out with effluent, but limits the depth of sludge that can be accommodated. The outlet device should generally extend below the liquid surface a distance equal to 35 percent of the liquid depth. For horizontal, cylindrical tanks, this distance should be reduced to 30 percent of liquid depth.

Example: Horizontal cylindrical tank 60 inches in diameter, liquid depth = 52 inches, outlet tee penetrates 52 × .30 = 15.6 inches below liquid level.

L. Inlet and outlet openings shall be designed and constructed to be water tight for at least a 20-year life of the system.

M. The dividing baffle in two compartment tanks shall extend from the bottom of the tank to at least 6 inches above the liquid line. The opening in the dividing baffle may be any shape and shall be at least 2 inches minimum dimension with a total area of at least 12 square inches. The baffle opening is to be centered 35 percent of liquid depth (30 percent for cylindrical tanks) below the liquid level.

N. Septic tanks shall have an access manhole with 20 inches minimum dimension for each compartment. If the manhole does not extend to surface grade, a small diameter (at least 1½ inch diameter) pipe shall extend to surface from the cover to mark the location of the manhole. This pipe shall not penetrate the lid of the tank. Inspection risers at least 6 inch diameter shall extend to surface grade centered over the inlet and outlet tees. All below grade attachments to the tank, connections, riser, extensions and lid shall be water tight. When any opening larger than 8 inches extends to the surface, that opening shall be child and tamper resistant. Ways to accomplish this include lids weighing at least 65 pounds, locks, or anchors that are not removable without special tools .

O. The sewer line from the house to the tank, all fittings and pipe in the tank, all extensions to the

Figure 3—Septic System Reference Sketch

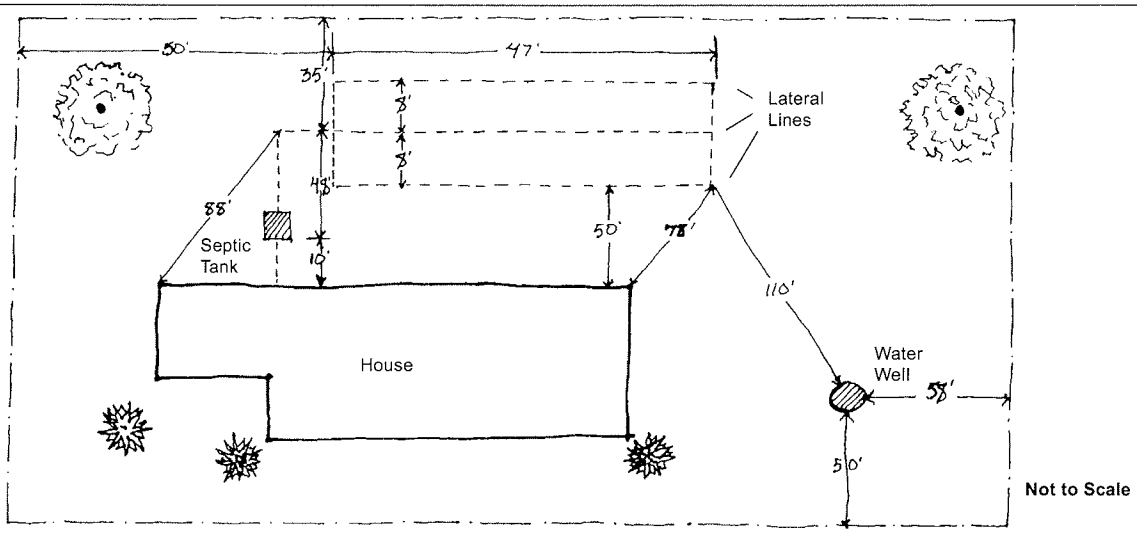

surface from the top of the tank and the first 10 feet exiting the tank shall be schedule 40 pipe or heavier.

P. Septic tanks shall be designed for at least a 20-year life. They shall be designed and constructed to withstand extremes in loads resulting from adverse conditions without excessive deflection, deforming, creep, cracking or breaking. Change in shape shall be limited to 5 percent. Loads shall be based on 62.4 pounds per cubic foot for water and water saturated soil. Top loads for design shall be in uniform 400 pounds per square foot plus 2,500 pound axle point load. Design shall be based on a 2 foot placement depth to top of the tank. If the tank will be placed deeper than 2 feet or subject to vehicular traffic over the tank, a design by Kansas licensed structural engineer shall be done for the specific conditions.

Special Considerations for Concrete Tanks

The anaerobic environment of a septic tank produces gases that combine with moisture to produce acids. Concrete above the liquid level is subject to corrosion and deterioration from these acids. This corrosion is best resisted by high quality concrete mix. Concrete septic tanks shall meet the following requirements in addition to those above:

A. The concrete design mix shall be for a compressive strength of at least 4,000 pounds per square inch at 28 day cure. The water-cement ratio shall not exceed 0.45.

B. Baffles or other interior concrete units shall not be used for precast or poured in place concrete septic tanks unless they are cast or built into the tank wall at the time the tank is constructed.

C. Air entrainment additives shall be added to 5 percent volume. Other chemical admixtures are encouraged to reduce water content, improve cement placement in forms and wet handling of incompletely cured concrete.

D. Concrete tanks and lids shall receive proper care during the hydration (hardening) period by: 1) monitoring and controlling temperature of the concrete and gradients (i.e. maintain 50 to 90 degrees Fahrenheit for conventional cure and up to 140 degrees Fahrenheit under low pressure steam cure.) 2) monitoring and controlling humidity to prevent adverse moisture loss from fresh concrete (i.e. prevent or replenish loss of essential moisture during the early relatively rapid stage of hydration.)

E. Reinforcing steel shall be placed as designed by a Kansas licensed structural engineer to ensure floor, wall, and top do not crack from moisture, frost, soil load, water loads, axle loads, or other stresses. Loads as specified above shall be used for the design condition. Reinforcing steel shall be covered by a minimum of 1 inch of concrete and shall be placed within ± ¼ inch.

F. Pouring the floor and walls of the septic tank at the same time (monolithic pour) is the preferred construction procedure. Very large tanks are often cast in 2 pieces and assembled in the field. All tanks shall meet the same structural strength standard as specified earlier. Two piece tanks shall have permanently sealed structurally sound joints and shall be water tested after assembly. A Kansas Licensed structural engineer shall determine if the tank meets the strength specification.

G. In areas of high sulfate water (greater than 250 mg/L) more acid producing gases are likely and additional corrosion resistance is appropriate. Recommended measures include ASTM C150 Type II cement (moderate sulfate resisting), ASTM C150 Type V cement (highly sulfate resisting), or coating interior concrete surfaces above the water line. Coatings that provide additional protection of the concrete include asphalt, coal tar, or epoxy. The product used should be acid resistant and provide a moisture barrier coating for the concrete. The product must not bleed into the water and thus risk groundwater contamination.

H. Manufacturers are strongly urged to follow guidelines and meet standards of American Concrete Institute, National Precast Concrete Association, and American Society for Testing and Materials. Manufacturers should identify and advertise their products that meet applicable standards.

Special Considerations for Fiberglass, Fiberglass Reinforced Polyester, and Polyethylene Tanks

A. All tanks shall be sold and delivered by the manufacturer completely assembled.

B. Tanks shall be structurally sound and support external forces as specified above when empty and internal forces when full. Tanks shall not deform or creep resulting in deflection more than 5 percent in shape as a result of loads imposed.

C. Tanks and all below grade fittings and connections shall be water tight.

Septic Tank Placement Specifications

A. During the process of placing the septic tank, avoid causing compaction in the absorption field by not entering the absorption field area.

B. Where natural soil is not suitable tanks shall be placed on a bed of at least 4 inches of sand, pea gravel, or crushed granular noncorrosive material for proper leveling and bearing. Material shall be no larger than 2 inches in diameter and bed depth shall be at least four times the largest material diameter.

C. Access manholes should be at surface grade, but shall not be more than 12 inches below surface grade. Where top of the tank must be more than 12 inches below surface grade, a water tight extension collar shall be added as required to raise the cover. Inspection openings placed over inlet and outlet tees or baffles shall be at least 6 inches in diameter and extend to the surface to permit easy tank inspection, cleaning of effluent filter, checking condition of tee or baffle and sludge accumulation.

D. Septic tanks should not be placed into the water table (including perched or seasonal water table) because of the tendency of the tank to float, especially when empty, as when pumped for maintenance. In any area subject to high water table or seasonally high water table, plastic and fiberglass tanks shall not be used unless precautions are taken to drain groundwater.

E. Septic tanks shall be water tight. An adequate test for water tightness is to fill the tank with water and let it stand for 8 hours to allow concrete to absorb water and plastic tanks to adjust. Then the tank is topped off and an initial measurement made with a hook gauge with vernier scale. After an hour, another measurement is made. Any loss is cause to reject the tank. Observations of the outside of the tank can also give clues about leakage losses. Any trickle, ooze, or exterior wet spot is reason to reject the tank. Precast one piece tanks are best tested at the plant before delivery. Two piece tanks that are assembled on-site must be tested following placement but before back filling.

F. The hole that the tank is placed into shall provide ample space around the tank for access to do compaction. Backfill shall be in uniform, compacted layers not exceeding 2 feet thick and surrounding the tank. Because of potential soil collapse, it is unsafe and may be illegal for a person to enter a trench deeper than 5 feet without adequate shoring. Compaction should be done from the surface without entering trenches deeper than 5 feet.

Absorption Field Size

Absorption field area is dependent on two factors: wastewater flow and soil loading rate. The wastewater design flow is based on the number of bedrooms allowing 150 gpd per bedroom (75 gpd per person) as discussed previously. The wastewater flow assumes the house is fully occupied with two persons per bedroom.

Figure 4. Typical Step Down or Serial Distribution System

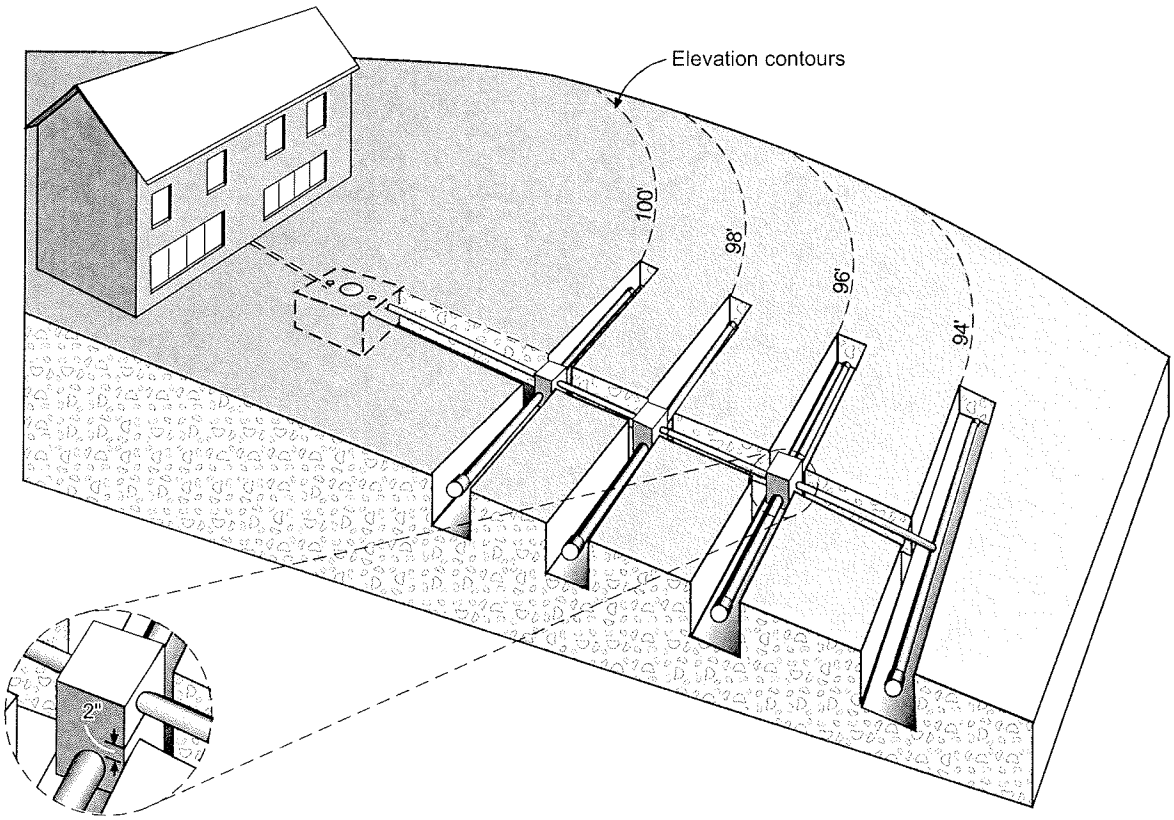

The site and soil evaluation previously discussed in that section is essential for good design. The loading rate is determined from the soil profile using Table 2 or from the perc rate using Table 4 or by using another method as specified in the local code. The soil absorption area is obtained by dividing the wastewater flow in gallons per day (gpd) by the loading rate (gpd per square foot (ft^2)).

The maximum gravity lateral run shall not exceed 100 feet and preferably should be less than 60 feet. If a lateral is supplied from the center, the total length shall not exceed 200 feet (100 feet to each side) and a maximum of 120 feet is preferred. Lateral systems on level sites with all laterals on the same elevation shall be connected at each end with a level manifold or connector pipes as shown in Figure 3 so there are no dead ends.

Table 8—Trench Separation Distances

Trench Width (inches)	Recommended Minimum Distance Between Trench Centerline (feet)
18-24	8.0
24-30	8.5
30-36	9.0

Figure 5—Standard Lateral Trench Design

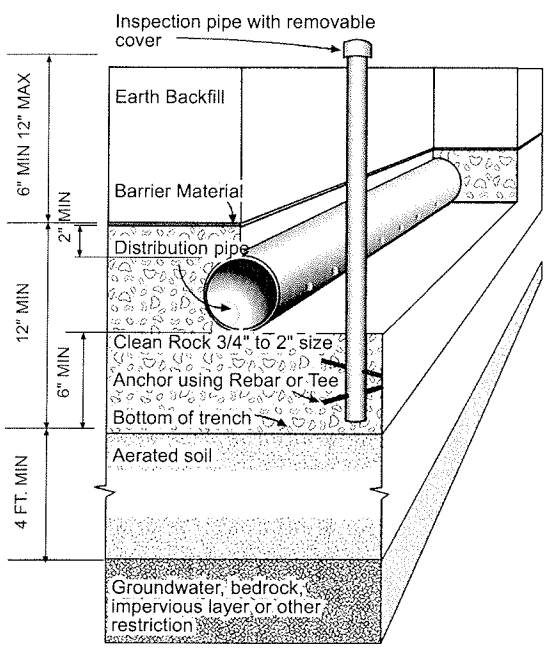

Loading rate example

The following example illustrates how to choose and use the loading rate for design:

- four-bedroom home
- Harney soil. Light silty clay loam with medium subangular blocky structure at 17 to 40 inches
- greater than 6 feet to restrictions of rock or perched water table
- perc rate 40 minutes per inch
- trench width 3 feet
- undisturbed soil width between trenches is 6 feet

Wastewater flow

Size of house (number of bedrooms) × flow rate (gpd) per bedroom = total daily wastewater production

4 bedrooms × 150 gpd/bedroom = 600 gpd

Loading rate

From soil evaluation Table 2 = 0.4 gpd/ft^2 and from perc test using Table 4 = 0.5 gpd/ft^2

Use the smaller of these or 0.4 gpd/ft^2 for design.

Absorption Area

Wastewater flow ÷ loading rate = absorption area

$$\frac{600 \text{ gpd}}{0.4 \text{ gpd/ft}^2} = \frac{600 \text{ ft}^2}{0.4} = 1{,}500 \text{ ft}^2$$

Trench Length

Absorption area ÷ trench width = length of trench

$$\frac{1{,}500 \text{ ft}^2}{3 \text{ feet}} = 500 \text{ lineal feet of trench length}$$

Field Area

Only the bottom area of the trench is considered in determining absorption area. The absorption trench width should be 18 to 36 inches, preferably 24 inches. For 3 feet wide trenches as in this example, the total lateral length needed is 500 feet. If trenches are 2 feet wide, the total lateral trench length is 750 feet. Assuming that a 3 feet wide trench will be used and 100 feet is the length of each trench, 5 trenches, 100 feet long will be needed for 1,500 ft^2 total trench bottom. To calculate the total area necessary for the field, include the minimum 6 feet of undisturbed soil between trenches. For this example the total width is (5 × 3 ft) + (4 × 6 ft) = 15 ft + 24 ft = 39 feet The total field area is 39 × 100 or 3,900 ft^2. An area equal to this same size should be reserved for future expansion and/or replacement.

For sites that slope more than about 1 percent, a level lateral system installed without shaping the surface often requires more than a half foot difference in soil cover from one side of the area to the other. On slopes greater than 1½ percent there is enough slope to use a step down (or serial) distribution. This results in the top lateral

being filled before effluent builds up and flows to the next lateral down slope. Step down or serial distribution as shown in Figure 4 is recommended for all sites that slope 1½ percent or more and/or result in more than 6 inches difference in cover for a level lateral system.

Adjacent absorption field trenches should be separated by at least 6 feet of undisturbed soil. Table 8 shows the minimum spacing for trench widths ranging from 18 to 36 inches. Individual trenches should be constructed on contour with the surface grade and with a level trench bottom to keep the trench cover a uniform thickness.

A minimum of 6 inches of rock or gravel shall be placed in the trench under the distribution pipe, followed by enough gravel to cover the pipe by 2 inches. The soil cover over the trench should not be less than 6 inches to provide adequate water holding capacity for grass nor more than 12 inches to maximize water and nutrient use by vegetation. Generally, the total trench depth should be as shallow as possible, but not less than 18 inches. Perforated distribution pipe shall be used and, where pressure dosing is not required, 4-inch diameter pipe is adequate. See standard lateral trench design and dimensions shown in Figure 5. Where pressure dosing is required, the pipe size should be just large enough to avoid excessive pressure loss (no more than 10 percent) in the distribution lines.

Variations from the standard lateral design described above allow the designer additional flexibility in some restrictive soil situations and are discussed in the site and soil evaluation section and included in Table 6. Many soils in eastern Kansas have a friable, moderately permeable surface soil layer of up to 15 to 18 inches in thickness. Many subsoils have high clay contents and a very restricted permeability. Laterals placed into the tight, very slowly permeable subsoil frequently do not perform satisfactorily.

Shallow in-ground laterals dug 6 to 12 inches into the surface soil layer and covered with imported topsoil may be a viable option to achieve a workable soil absorption system for some soil conditions. Shallow in-ground systems may overcome marginal conditions such as groundwater or rock over 4½ feet but less than 6 feet required for conventional laterals.

The shallow, rock-filled trench shall be covered with a synthetic geotextile barrier material (at least 3 ounce nylon or 5 ounce polypropylene nonwoven filter fabric) before the lateral and interval between laterals is covered with top soil brought to the site.

In soils with still more restrictive or shallow soil conditions (4 to 4½ feet to restrictions) an at-grade lateral system may be an option. The at-grade lateral involves preparing the soil surface on a level contour in strips much as the first step in constructing a Wisconsin mound. The rock, normally placed in a trench, is placed on the surface. Pressure dosing distribution is used to ensure even water distribution and help prevent horizontal flow at the natural soil surface resulting from temporary ponding in the lateral. The rock lateral shall be covered with barrier material before the lateral and interval space is covered with top soil brought to the site.

Loading rates and other design criteria are basically the same for shallow in-ground and at-grade systems as for conventional lateral trenches. The at-grade lateral requires tilling the soil strip under the lateral on a level contour. A pressure dosing system shall be included as a part of the at-grade design. Distribution lateral line pressure should not exceed 5 feet of head. Orifices in the pipe shall be sized and spaced to evenly distribute flow throughout the lateral system. If the area is too large to pressurize the entire system, a multizone design and sequencing valve shall be used to dose zones in sequence.

The use of an effluent filter on the septic tank outlet is strongly encouraged to prevent solids from plugging the absorption field. This will prolong the life of the absorption field and improve performance of the system. It also helps reduce the strength of wastewater effluent.

Absorption Field Material Specifications

Rigid PVC or corrugated polyethylene plastic pipe meeting American Society for Testing and Materials (ASTM) standard ASTM D2729-93 and ASTM F405-93 or latest edition respectively meet minimum standards for use as solid or perforated gravity distribution lines. All materials used in the plumbing, wastewater line, and lateral fields shall meet standards specified by ASTM. In gravity lateral pipes, perforations are circular, ½-inch diameter and are placed at 4 and 8 o'clock positions on the pipe circumference. In no circumstance is slotted pipe acceptable as the narrow slot openings plug easily.

Washed gravel or crushed stone is commonly used as the porous media for the trench. The media gradation shall be ¾ inches to 2 inches in diameter, with the smaller sizes preferred to reduce masking of the infiltration surface. Uniform size is preferred because more void space is created. Rock having a hardness of three or more on the Moh's Scale of Hardness is required. Rock that can scratch a penny without crumbling or flaking generally meets this criterion. Larger diameter and smaller diameter material, or soft aggregate such as calcite limestone are not acceptable and shall not be used.

Fines should be eliminated as much as possible. Fines shall not exceed 5 percent by volume, so unwashed material is generally unacceptable. A simple test is to wash a volume of material into a clear container of the same diameter and measure fines (5 inches of gravel should produce no more than ¼" of fines).

When suitable rock or gravel is not locally available, is expensive, or access to the site is restricted, gravelless chambers are good choices for laterals. They have the advantage of more liquid storage capacity, reducing the effect of high flows or loadings on weekends or holidays. Chamber systems are lightweight making installation easier at sites with restricted heavy equipment access. Chambers also may be recovered for reuse in the future. Before using chambers, consult the local authority to identify requirements.

Chunks of recycled tires are a suitable substitute for rock. Ninety percent of the pieces should be 1/2 to 4 inches in size with no fines. Wire strands shall not extend more than 1/2 inch from the pieces.

The porous media shall be covered with a filter fabric (at least 3 ounce nylon or 5 ounce polypropylene) before backfilling to prevent soil from sifting through the media. Traditional untreated building paper or 3-inch layer of straw are inferior second choices or are not recommended. Filter fabric is required when tire pieces are used as the porous media. Materials relatively impervious to air and moisture are not permitted.

Field Construction Specifications

Protection of the absorption field area begins before any activity on the site. The site and soil evaluation identifies the best lateral field area and reserve area. Heavy equipment, such as loaded trucks, should be kept away from the absorption field by marking the site. The weight of such equipment can permanently alter soil characteristics due to compaction. Excessive equipment or foot traffic can compact even relatively dry soils.

Construction of septic tank-lateral field systems when the soil is too wet causes compaction and smearing of the soil structure, greatly reducing the water absorption and treatment efficiency of the system. A good test for this is to work the soil into a ball and roll between the hands. If it can be rolled out into a soil wire 1/4 inch in diameter or smaller without falling apart, it is too wet and construction should not proceed.

Before beginning construction, contours should be determined and level lateral locations should be marked by flags or stakes on the contour. Trenches shall not be excavated deeper than the design depth or wider than the design width. Following excavation, the trench sides and bottom shall be raked to remove any smearing and graded to assure a bottom with no more than 1 inch difference in elevation along the entire lateral length or the complete field for a level system. The lateral pipe and rock cover shall not vary more than 1 inch in elevation along the lateral length using a surveyor level or laser.

The trench bottom should then be immediately covered with at least 6 inches of rock or the chamber. Distribution pipes are carefully placed on the rock, and leveled with perforations at 4 o'clock and 8 o'clock positions. Rock is placed around and over the pipe to a cover depth of at least 2 inches.

After rock and pipe have been placed in the trench the filter fabric or other barrier shall be placed to protect from soil movement into the rock. Finally, earth backfill shall be carefully placed to fill the trench cavity. The backfill shall be mounded above the trench about 20 percent of the soil fill height to allow for settling. If a variation in the trench depth is used, topsoil also must be placed between laterals as well as over the lateral to level the site.

Maintaining Onsite Wastewater Systems

The homeowner's responsibility for onsite wastewater treatment and disposal does not end when the backfill is placed over the trench lines and wastewater introduced. Maintenance of the system is a critical factor to ensure long life and continued effectiveness of the system. Minimum annual maintenance criteria include:

- check the sludge and scum in the tank to determine pumping requirements; tanks need to be pumped regularly depending on wastewater flow and tank size, (often 3 to 5 years),
- check the baffles or tees to ensure they are intact, secure, and in good condition,
- check the septic tank and soil absorption area monthly for indications of leaks or failure,
- check observation ports in each lateral to ensure effluent is reaching all parts of the system,
- check effluent filter and clean as needed.

Refer to K-State Research and Extension bulletins listed at the end of this document for additional information. A file containing records of repairs, pumping, site plan of the system, annual checklist, and other pertinent information should be maintained for easy reference and for information when ownership changes.

Wastewater Stabilization Ponds

Wastewater ponds, sometimes called lagoons, are a viable sewage treatment method and should be considered for individual household wastewater where soil conditions have severe limitations for conventional lateral absorption field systems. Single family wastewater ponds should not be considered if septic tank- lateral field systems are feasible as determined by local requirements or recommendations contained in this bulletin. Wastewater ponds are especially applicable on sites with very restrictive permeability, high clay subsoil, (i.e. slow perc rates) or shallow bedrock where adequate area is available.

A wastewater pond is a small pond with a maximum 5-foot operational water depth, which receives domestic wastewater. Size, as in a soil absorption field, is deter-

mined by the number of occupants and thus the wastewater flow, the soil, and evaporation.

Wastewater enters the pond by a pipe outlet near the bottom close to the center of the lagoon. All private wastewater ponds must be nondischarging and must be fenced. Wastewater ponds require a sizable area, including water surface, embankment, and separation distances. Maintenance is required to remove vegetation at the water's edge, to mow vegetation on embankments, and to remove trees that will shade the pond. Odors from a properly designed, installed, and maintained pond are infrequent and minimal.

Individuals considering wastewater ponds for sewage treatment should first check with county or other local authorities to determine requirements. Proceed with any private sewerage facility only when public sewers are not available and all applicable local requirements are met. Refer to K-State Research and Extension bulletins on wastewater ponds for more information and guidance.

Alternative Systems Guidelines

Kansas Administrative Regulations (K.A.R. 28-5-9) authorize county health departments, or other authorized local agency, in counties that have local codes, to grant a variance for alternative onsite wastewater treatment and disposal systems. Most county codes contain a variance clause that authorizes the local administrative agency to grant requests for variances provided that certain conditions are met. The request for variance is filed with the county administrative agency. The local agency can consult with KDHE for technical assistance in evaluating the system, but has the authority to issue the variance locally if there is a local code.

No private onsite wastewater system shall have a surface discharge.

When there is no local code KDHE is authorized by regulation to grant a variance. Onsite wastewater treatment options that might be considered for variance include enhanced wastewater treatment options such as aerated tank, sand or media filter, rock-plant filter, or other equivalent system. Design, construction, operation, and maintenance criteria or guidelines are planned but are not yet available for use in Kansas.

Some county codes require that design and specifications for alternative systems be completed by a licensed professional engineer. Engineers should be adequately trained or have experience under adequate supervision, before designing alternative systems. Results show that design by an inexperienced engineer can not produce a more reliable or long life alternative than conventional systems. Some alternative systems involve complex design and specific construction criteria that can result in dramatic failure when violated.

Appendix A

Conducting a Perc Test

Water movement through soil in response to gravity is called percolation. For wastewater soil absorption field evaluation, the absorption of water from a post-type hole is a method for the evaluation for soil suitability and loading rate design. The absorption of water from this hole involves water movement in 3 dimensions and forces other than gravity. The term "perc" test is applied to this evaluation. The purposes of this test include:

- Obtaining the rate at which wet, unsaturated soil will absorb water,
- Helping assess suitability of soil on a specific site to absorb septic tank effluent,
- Helping select from among alternative onsite sewage systems and establish a design loading rate.

To ensure the best evaluation, all available soil information should be utilized. This would include assessment of restrictive conditions such as high water table, perched water table, shallow depth of soil, and restrictive layers such as clay pan; soil profile evaluation from the site, including history of high water tables; and description of soil profiles from county soil surveys.

Brief Description

A minimum of four to six holes are placed throughout the proposed site of the absorption field and at the depth of the proposed laterals and soaked with water until the clay is swelled, usually for at least 24 hours. The perc rate is measured in each hole and reported as the number of minutes it takes for an inch of water to be absorbed in the hole. The optimum time to conduct a perc test is in the spring when the soil is normally wet. An accurate perc test during a dry period when the soil is cracked may not be possible.

Materials Needed to Conduct the Perc Test

1. Site plan including proposed absorption field and location of tests. Dimensions help ensure the test holes are properly located in and around the field.
2. One batter board–1 inch by 2 inch board of 18 inches long for each perc test hole.
   A. Number each board so that each test hole will be distinguishable.
   B. Mark a center line on the side of each batter board. This will provide a consistent reference point for the measuring device.
3. Durable measuring device (1 to 2 feet long) and a way to reproducibly locate the water surface, such as a pointed hook or float on a stiff wire or rod.
4. An adequate supply of water to soak the hole and conduct the test. Water usually has to be transported to the site. Two hundred to 300 gallons is usually adequate.

Procedure

1. **Identify Proposed Site of Absorption Field**—The site preferably should be located downslope from the septic tank. If effluent will not flow by gravity, an effluent pump may be used to move effluent to a suitable absorption field. For new homesites, the proposed area reserved for future use should also be checked for suitability.
2. **Number and Location of Tests**—Locate a minimum of four to six holes uniformly over the proposed absorption field site. If the site is sloping, it is especially important to have test holes at all elevations to be used so that any differences in soil will be evaluated.
3. **Type of Test Hole**—Dig or bore each hole to the depth of the proposed trench (usually 18 to 24 inches) and with a consistent diameter (8 inches is recommended). All test holes shall be the same size to help ensure consistency in results.
4. **Prepare the Test Hole**—Scratch the sides and bottom of the hole to eliminate any smeared or compacted soil surfaces and remove loose material from the hole. Place 2 inches of washed gravel in the bottom of the hole. The gravel can be contained in a mesh bag for easy removal and reuse at other sites. This gravel protects the bottom of the hole from erosion, scouring, and sediment as water is introduced.
5. **Wet Hole to Allow for Soil Swelling**—Saturation means that the voids between the soil particles are filled with water. This happens fairly quickly for soil immediately surrounding the portion submerged in water. Swelling is caused by intrusion of water into the clay particles and can take many hours and possibly days when the soil is quite dry.
   A. Carefully add 12 to 14 inches of water. Using a hose will prevent soil washing down from the sides of the hole.
   B. Maintain the water level for at least 24 hours to allow for swelling to occur. In most cases it will be necessary to add water periodically from a reservoir. A float supplied by a hose from a reservoir simplifies the procedure.
   C. If the soil appears to be sandy or initially very dry, plan to check the condition of the hole wetting after 12 hours or overnight. If there is no water left in the hole and the reservoir is dry, refill the reservoir and holes. After the full 24 hours have passed since soaking was initiated, begin measuring as described in #6.
6. **Perc Measurement**
   A. Remove the apparatus used to add water to the hole.
   B. Place the batter board across the top of each hole and secure with weights, spikes or attach to stakes. Be sure that the centerline mark is centered over the hole and each board is numbered.
   C. Align the measuring rule with mark on the board and use the hook gauge or the float and rod to read the level when it just touches the water surface. Record the measurement and time. Fill the hole to about 6 inches over the rock and make the initial measurement.
   D. Measure at 30-minute intervals (does not have to be exact) recording both level and time. If the water level in the hole drops too rapidly, it will be necessary to reduce the time interval for measurement. The time interval should be short enough that the water level should not drop more than 25 percent of the wetted hole depth.

   Note: If the water drops more than 1 to 2 inches in 30 minutes, it will be necessary to add water to the hole after each reading until it is the same depth as recorded initially. Be sure to record the measurement of the refilled perc hole.
7. **Calculate Perc Rate**. Divide time interval by drop in water level to find the perc rate in minutes per inch (mpi).

Examples:

If the drop is ⅝ inches in 25 minutes:

$$\frac{25}{5/8} = 25 \times \frac{8}{5} = 40 \text{ mpi}$$

If the drop is 1½ inches in 12 minutes:

$$\frac{12}{1\frac{1}{2}} = \frac{12}{3/2} = \frac{12 \times 2}{3} = 8 \text{ mpi}$$

   A. Continue measurements until each of three consecutive calculated rates varies by no more than 10 percent from the average of the three rates. Use the average of three rates as the value for that hole

   Example:

   Rates of 26.0, 28.0, and 30.5 mpi average 28.2 mpi

   B. Measure and calculate the rate for each hole in the application field. Average the rates for all holes as the value to use for loading rate and bottom area sizing.
8. **Compare with Permeability in the NRCS Soil Survey**. The field measured perc (mpi) should be no smaller than about one third the inverse of the permeability rate shown in the table of physical and chemical properties of soils in the soil survey report. If it is, suspect a problem with the perc test, soil mapping or other cause. A well aggregated, undisturbed soil may have a good perc rate.

Appendix B

Sources of Additional Information

Kansas State University, Agricultural Experiment Station and Cooperative Extension Service Bulletins[21] (except as noted)

Wastewater Systems and Related Information

Design of Submerged Flow Wetlands, Special Report 457, Missouri Small Flows Education and Research Center, Agricultural Experiment Station, University of Missouri, Columbia, MO 65211

Environmental Health Handbook, First Edition, Aug 1992, Kansas Association of Sanitarians, KDHE, and K-State Research and Extension cooperating, available from K-State, Extension Biological and Agricultural Engineering, Cost: $20.00[22]

Get to Know Your Septic System, MF-2179

How to Run a Percolation Test, FO-0583-C, (Revised 1993), Minnesota Extension Service, University of Minnesota, St. Paul, MN 55108

Onsite Domestic Sewage Disposal Handbook, MWPS-24, Midwest Plan Service, Iowa State University, available from K-State, Extension Biological and Agricultural Engineering, Cost: $6.00[22]

Plugging Cisterns, Cesspools, Septic Tanks, and Other Holes, MF-2246

Rock-Plant Filter Design and Installation, expected 1997

Rock-Plant Filter Operation, Maintenance and Repair, expected 1997

Septic Tank Maintenance, MF-947

Septic Tank–Soil Absorption System, MF-944

Soil Evaluation for Home Septic Systems, MF-945

Wastewater Pond Design and Construction, MF-1044

Wastewater Pond Operation, Maintenance, and Repair, MF-2290

Why Do Septic Systems Fail? MF-946

Your Wastewater System Owner/Operator Manual, S-90 For sale bulletin, cost 35¢

Other Helpful Bulletins

Kinds and Types of Levels, LR-17[22]

Land Judging and Homesite Evaluation, S-34

Operating, Checking and Caring for Levels, LR-101[22]

Safe Domestic Wells, MF-970

Soil Water Measurements: An Aid to Irrigation Water Management, L-795

Using a Level, AF-19[22]

Standards Related to Onsite Wastewater System Materials and Procedures

ACI[23]212.3R Chemical Admixtures for Concrete

ACI 350R Environmental Engineering Concrete Structures

ASTM[24]C150-95 Standard Specification for Portland Cement. Vol. 04.01

ASTM C267-82 Standard Test Method for Chemical Resistance of Mortars, Grouts, and Monolithic Surfacings. Vol 04.05

ASTM C452-95 Standard Test Method for Potential Expansion of Portland Cement–Cement Mortars Exposed to Sulfate. Vol. 04.01

ASTM C890-91 Standard Practice for Minimum Structural Design Loading for Monolithic or Sectional Precast Concrete Water and Wastewater Structures. Vol. 04.05

ASTM C1227-94 Standard Specification for Precast Concrete Septic Tanks. Vol. 04.05

ASTM D1600-94 Standard Terminology for Abbreviated Terms Relating to Plastics. Vol. 08.04

ASTM D2321-89 Standard Practice for Underground Installation of Thermoplastic Pipe for Sewers and Other Gravity-Flow Applications. Vol. 08.04

ASTM D2729-93 Standard Specification for Poly(Vinyl Chloride) (PVC) Sewer Pipe and Fittings. Vol. 08.04

ASTM F481-94 Standard Practice for Installation of Thermoplastic Pipe and Corrugated Tubing in Septic Tank Leach Fields. Vol. 08.04

ASTM F405-93 Standard Specification for Corrugated Polyethylene (PE) Tubing and Fittings. Vol. 08.04

ASTM F412-94a Standard Terminology Relating to Plastic Piping Systems. Vol. 08.04

ASTM F449-93 Standard Practice for Subsurface Installation of Corrugated Thermoplastic Tubing for Agricultural Drainage or Water Table Control. Vol. 08.04

ASTM D3385-94 Standard Test Method for Infiltration Rate of Soils in Field Using Double-Ring Infiltrometer. Vol. 04.08

ASTM F789-89 Standard Specification for Type PS-46 Poly(Vinyl Chloride) (PVC) Plastic Gravity Flow Sewer Pipe and fittings. Vol. 08.04

ASTM F810-93 Standard Specification for Smoothwall Polyethylene (PE) Pipe for Use in Drainage and Waste Disposal Absorption Fields. Vol. 08.04

ASTM ASTM F949-93a Standard Specification for Poly (Vinyl Chloride) (PVC) Corrugated Sewer Pipe With a Smooth Interior and Fittings. Vol. 08.04

NPCA[25] Durable, Watertight Precast Concrete, TECH notes, April 1996

NPCA Septic Tank Manufacturing: A Best Practices Manual. Anticipated by Summer 1998

NPCA Underground Watertight Systems (video)

[21] *Production Services/Distribution, Kansas State University, 28 Umberger Hall, Manhattan, KS 66506-3402, Phone: (785) 532-1150*
[22] *Available through Extension Biological and Agricultural Engineering, Kansas State University, 237 Seaton Hall, Manhattan, KS 66506-2917, Phone: (785) 532-5813*
[23] *American Concrete Institute, P.O. Box 9094 Farmington Hills, Michigan 48333, Phone: (810) 848-3808*
[24] *American Society for Testing and Materials, 100 Barr Harbor Drive, West Conshohocken, PA 19428-2959 Phone (610) 832-9500*
[25] *National Precast Concrete Association, 10333 North Meridian Street, Suite 272, Indianapolis, Indiana 46290 Phone (317) 571-9500*

KDHE District Boundries and District Offices

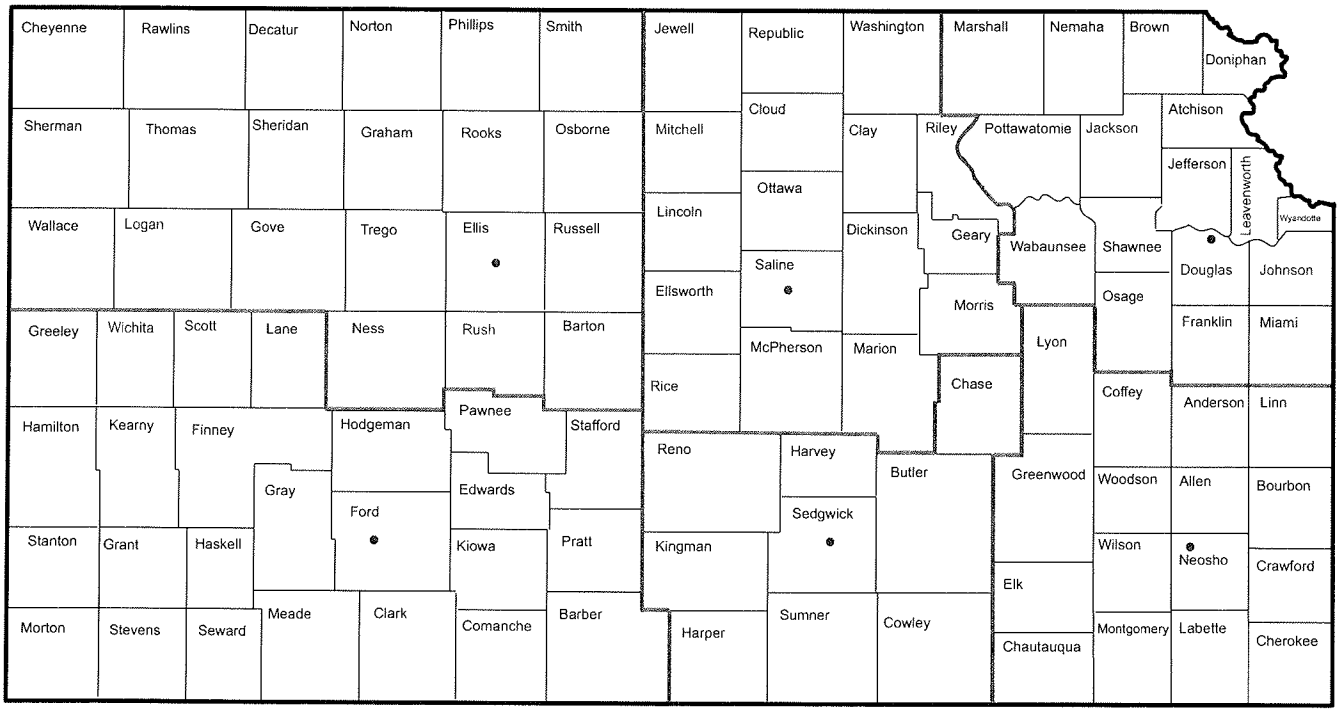

KDHE, Division of Enviroment, Nonpoint Source Section
Forbes Field, Bldg. 283
Topeka, Kansas 66620
(785) 296-4195

KDHE District Offices

Kansas Dept Health & Environment
Northwest District Office
2301 E. 13th Street
Hays, KS 67601-2651
(785) 625-5663

Kansas Dept Health & Environment
North Central District Office
2501 Market Place, Suite D
Salina, KS 67401
(785) 827-9639

Kansas Dept Health & Environment
Northeast District Office
800 W. 24th Street
Lawrence, KS 66046-4417
(785) 842-4600

Kansas Dept Health & Environment
Southwest District Office
302 W. McArtor Road
Dodge City, KS 67801-6098
(316) 225-0596

Kansas Dept Health & Environment
South Central District Office
130 S. Market, 6th Floor
Wichita, KS 67202-3802
(316) 337-6020

Kansas Dept Health & Environment
Southeast District Office
1500 W. 7th Street
Chanute, KS 66720-9701
(316) 431-2390

Edited, printed, and distributed by Kansas State University Agricultural Experiment Station and Cooperative Extension Service under contract from Kansas Department of Health and Enviroment.

Kansas State University Agricultural Experiment Station and Cooperative Extension Service

MF-2214 November 1997

Issued in furtherance of Cooperative Extension Work, acts of May 8 and June 30, 1914, as amended. Kansas State University, County Extension Councils, Extension Districts, and U.S. Department of Agriculture Cooperating, Richard D. Wootton, Associate Director. All educational programs and materials available without discrimination on the basis of race, color, national origin, sex, religion, age, or disability.

November 1997 MS11-97—7M